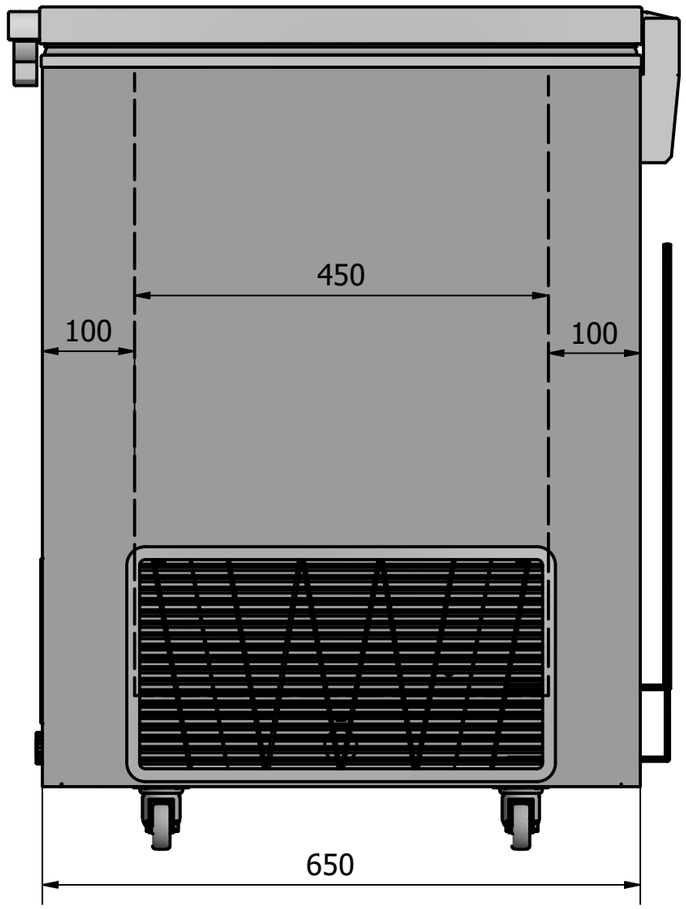

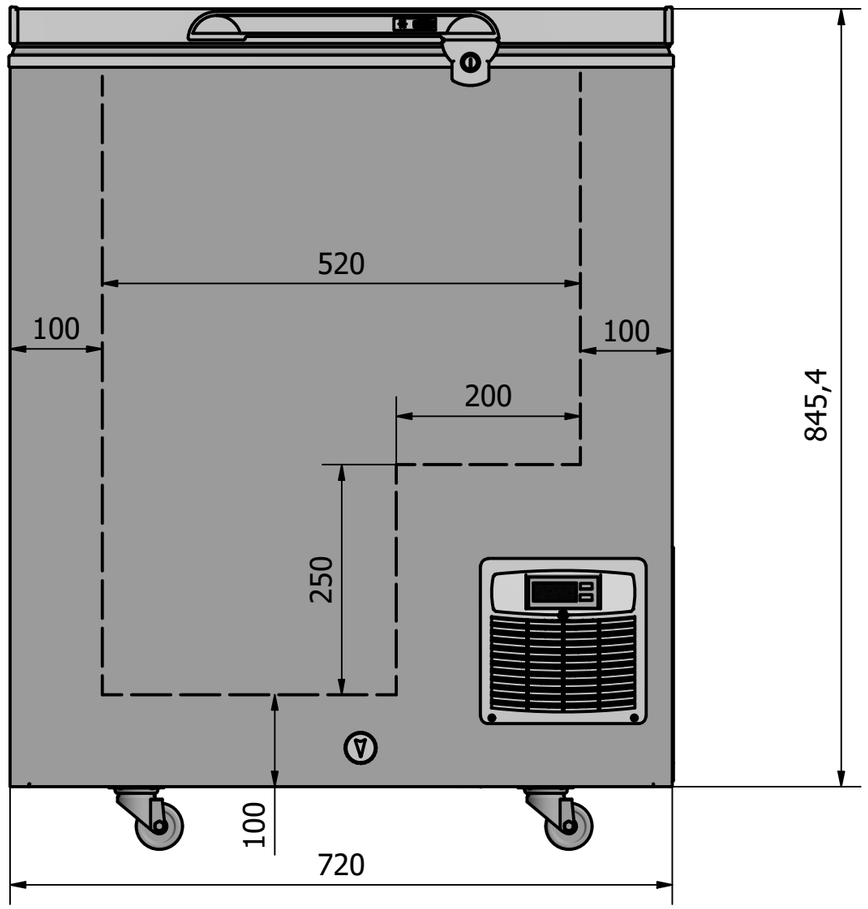

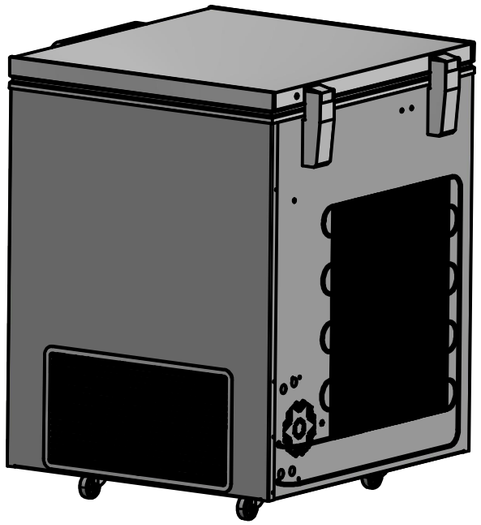

Designed by	Checked by	Approved by	Date		Date	
Marina Pedersen					15-09-2021	

Elcold Aps	Måltegning		
	PRO 11	Edition	Sheet 1 / 1